PR-56 Series

High Pressure Brass Regulator (6,000 psig Inlet)

To meet the demands for the safe reduction of inlet pressures up to 6,000 psig, GO Regulator has designed the PR-56 Series regulator. This precision regulator features a piston sensing design which provides the operator with low adjusting torque requirements when setting the outlet pressure.

The optional self relieving feature provides an additional level in operational ease, as it allows for trapped downstream pressure to be safely vented to atmosphere through the bonnet.

Features & Specifications

- Gas or liquid service
- Brass (alloy 360) construction
- Better than 25 Ra finish in diaphragm cavity
- Stainless steel spring loaded piston sensor
- 20 micron filter
- Bubble-tight shutoff
- Viton® seals (other elastomers optional)
- Inlet pressure maximum 6,000 psig
- Outlet pressure ranges are 0–250, 0–500, 0–750, 0–1000, 0–2000, 0–4000, and 0–6000 psig
- ¼″ FNPT standard
- Cv flow coefficient 0.05 or 0.2

Options

- Gauges and CGA fittings for cylinder gas application
- Self-relieving and captured vent
- ⅜″ FNPT

PR-56 Series

To Order, contact your local Distributor Link below:
www.goreg.com/distributor/index.htm

Verify that your chosen part number is valid using the GO Wizards at
www.goreg.com/products/matrix/index.htm

How to Order

PR56 –

BODY MATERIAL
- **2** Brass

PORT CONFIGURATION
- **A** Standard

For more port configurations, see page 33.

PROCESS PORT TYPES (GAUGE PORT TYPES, IF SPECIFIED)
- **1** **¼˝ FNPT (¼˝ FNPT gauge ports)**
- **4** ⅜˝ FNPT (¼˝ FNPT gauge ports)

SURFACE FINISH OF DIAPHRAGM CAVITY
- **1** < 25 Ra
- **5** < 25 Ra with 10-32 mounting holes

SEAT MATERIAL
- **A** Tefzel®
- **H** PCTFE (formerly Kel-F® 81)
- **Q** PEEK™

FLOW COEFFICIENT (Cv)
- **2** 0.05
- **5** 0.2

OPTIONS
- **A** EB33
- **B** EB5
- **D** Helium leak test
- **E** Pressure test certificate
- **F** Certificate of Conformity
- **G** CMTR

CAP ASSEMBLY
- **1** Standard, stainless steel
- **4** Panel mount, stainless steel
- **J** Captured vent, panel mount, stainless steel
- **7** Captured vent, stainless steel
- **8** Tamper Proof, stainless steel

PISTON MATERIAL
- **4** Stainless steel/PTFE cavity O-ring
- **5** Stainless steel/Viton® cavity O-ring

PISTON TYPE
- **1** Non-self-relieving
- **3** Self-relieving

OUTLET RANGE
- **I** 0–250 psig
- **J** 0–500 psig
- **W** 0–750 psig
- **K** 0–1000 psig
- **L** 0–2000 psig
- **N** 0–4000 psig
- **O** 0–6000 psig

NOTE: Contact the factory for any additional requirements.

Maximum Temperature & Operating Inlet Pressures

SEAT MATERIAL	MAXIMUM TEMPERATURE	@	MAXIMUM OPERATING INLET PRESSURE
Tefzel®	150° F (66° C)	@	3600 psig (24.82 MPa)
PCTFE (formerly Kel-F® 81)	175° F (80° C)	@	6000 psig (41.37 MPa)
PEEK™	175° F (80° C)	@	6000 psig (41.37 MPa)

Outline and Mounting Dimensions

Weight = 4.4 lbs (2.0kg)

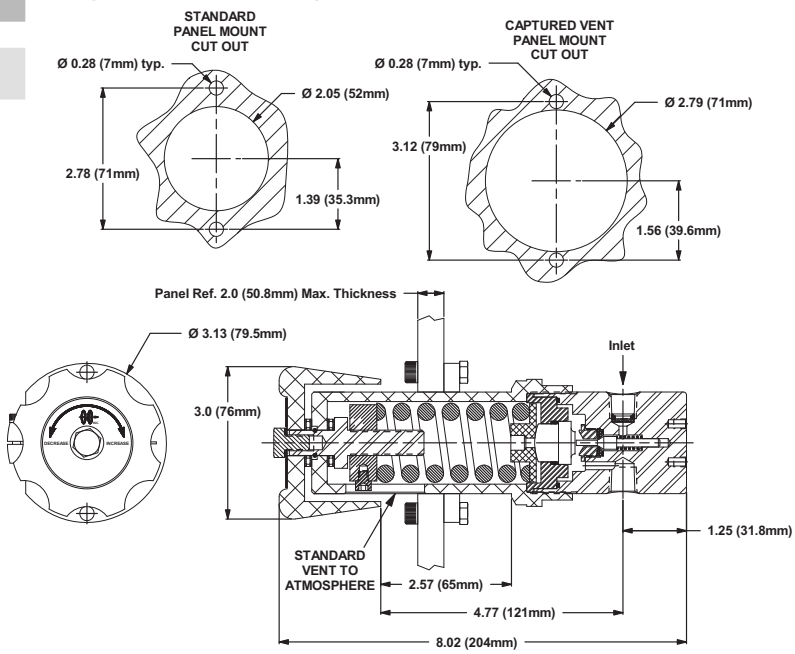

Tefzel® is a registered trademark of the DuPont Company.
Kel-F® is a registered trademark of 3M Company.
PEEK™ is a trademark of Victrex PLC.
Viton® is a registered trademark of DuPont Dow Elastomers.